Dimensioning

Index

Overview EO 24° cone connections D3

Not recommended D4

EO 24° cone end
(DIN 3861/ISO 8434-1)/dimension D4

EO 24°-DKO swivel connector
(DIN 3865/DIN EN ISO 8434-1/-4)/dimensions D5

Overview O-Lok® connections D6–D7

O-Lok® end
(ISO 8434-3/SAE J1453)/dimensions D8

O-Lok® swivel connector
(ISO 8434-3/SAE J1453)/dimensions D9

Overview Triple-Lok® connections D10–D11

Triple-Lok® end
(ISO 8434-2/SAE J514)/dimensions D12

Triple-Lok® swivel connector
(ISO 8434-3/SAE J514)/dimensions D13

DIN 60° cone end (DIN 7631)/dimensions D14

Adapter 60° cone end (ISO/DIS 8434-6)/dimensions D15

NPSM Swivel adapters (SAE J516)/dimensions D16

Port end dimensions for tube fittings D17–D19

D

Overview EO 24° cone connections

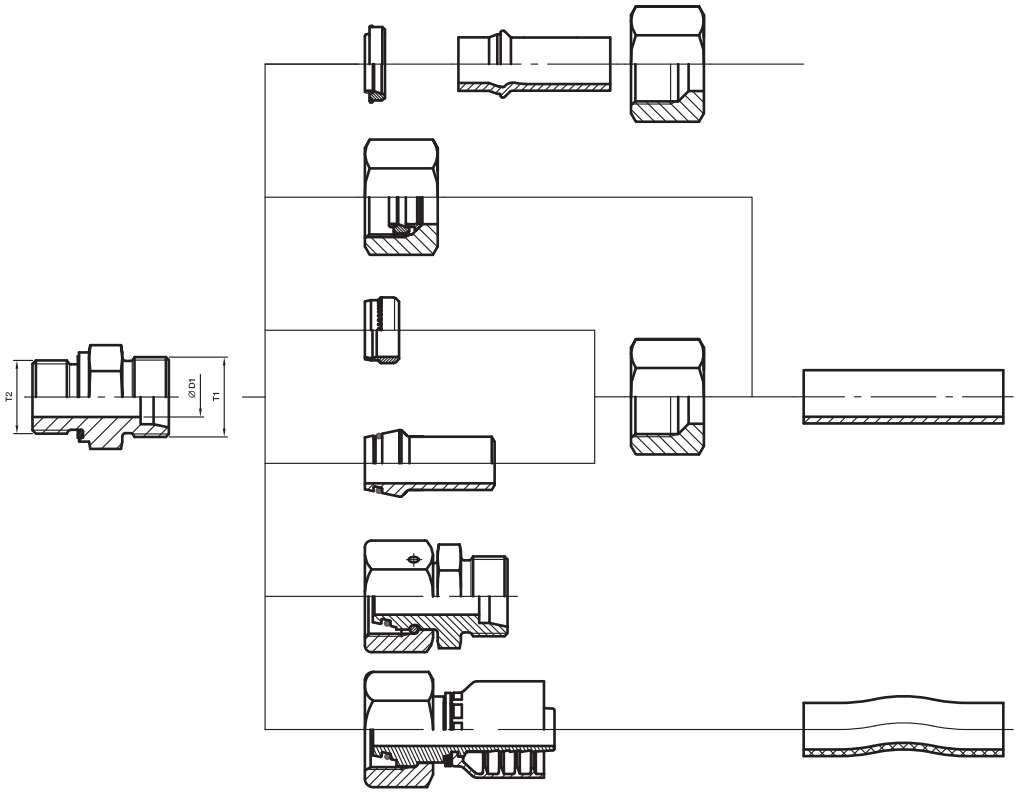

Size	D1 Tube O.D. mm	T1 Thread metric	Thread O.D. mm	T2 Port thread BSPP	metric	BSPT (short)	metric tapered	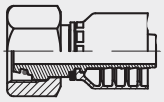
LL	04	M 08×1	8.0	G 1/8 A	M 08×1	R 1/8 tap.	M 08×1 tap.	
	05	M 10×1	10.0	G 1/8 A	M 08×1			
	06	M 10×1	10.0	G 1/8 A	M 10×1	R 1/8 tap.	M 10×1 tap.	
	08	M 12×1	12.0	G 1/8 A	M 10×1	R 1/8 tap.	M 10×1 tap.	
	10	M 14×1	14.0	G 1/4 A		R 1/4 tap.		
	12	M 16×1	16.0	G 1/4 A		R 1/4 tap.		
L	06	M 12×1.5	12.0	G 1/8 A	M 10×1		M 10×1 tap.	1CAxx-6-yy
	08	M 14×1.5	14.0	G 1/4 A	M 12×1.5		M 12×1.5 tap.	1CAxx-8-yy
	10	M 16×1.5	16.0	G 1/4 A	M 14×1.5		M 14×1.5 tap.	1CAxx-10-yy
	12	M 18×1.5	18.0	G 3/8 A	M 16×1.5		M 16×1.5 tap.	1CAxx-12-yy
	15	M 22×1.5	22.0	G 1/2 A	M 18×1.5		M 18×1.5 tap.	1CAxx-15-yy
	18	M 26×1.5	26.0	G 1/2 A	M 22×1.5		M 22×1.5 tap.	1CAxx-18-yy
	22	M 30×2	30.0	G 3/4 A	M 26×1.5		M 26×1.5 tap.	1CAxx-22-yy
	28	M 36×2	36.0	G 1A	M 33×2			1CAxx-28-yy
	35	M 45×2	45.0	G 1 1/4 A	M 42×2			1CAxx-35-yy
	42	M 52×2	52.0	G 1 1/2 A	M 48×2			1CAxx-42-yy
S	06	M 14×1.5	14.0	G 1/4 A	M 12×1.5		M 12×1.5 tap.	1C9xx-6-yy
	08	M 16×1.5	16.0	G 1/4 A	M 14×1.5		M 14×1.5 tap.	1C9xx-8-yy
	10	M 18×1.5	18.0	G 3/8 A	M 16×1.5		M 16×1.5 tap.	1C9xx-10-yy
	12	M 20×1.5	20.0	G 3/8 A	M 18×1.5		M 18×1.5 tap.	1C9xx-12-yy
	14	M 22×1.5	22.0	G 1/2 A	M 20×1.5		M 20×1.5 tap.	1C9xx-14-yy
	16	M 24×1.5	24.0	G 1/2 A	M 22×1.5		M 22×1.5 tap.	1C9xx-16-yy
	20	M 30×2	30.0	G 3/4 A	M 27×2			1C9xx-20-yy
	25	M 36×2	36.0	G 1A	M 33×2			1C9xx-25-yy
	30	M 42×2	45.0	G 1 1/4 A	M 42×2			1C9xx-30-yy
	38	M 52×2	52.0	G 1 1/2 A	M 48×2			1C9xx-38-yy

xx - Fitting Series • yy - Hose Size
From Parker hose fitting (HPDE and PFDE)

Not recommended

	Reason
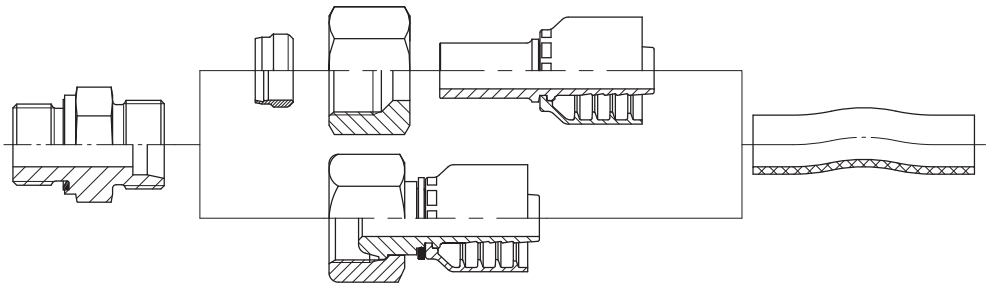	High risk of hose blow off. For ferrule assembly special hardened tools are required.
	With the use of the Universal-connection high risk of cracks in 24° cone area of stud ends sizes 6-L up to 18-L.

EO 24° cone end (DIN 3861/ISO 8434-1)/dimension

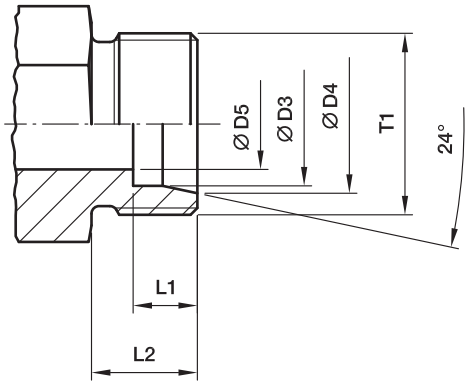

Tube O.D. Size	T1	∅ D3 mm	∅ D4 mm	∅ D5 mm	L1 mm	L2 mm
04-LL	M 8×1	04	5.0	3.0	4.1	8
06-LL	M 10×1	06	7.5	4.5	5.6	8
08-LL	M 12×1	08	9.5	6.0	5.6	9
10-LL	M 14×1	10	11.5	8.0	5.6	9
12-LL	M 16×1	12	13.5	10.0	6.1	9
06-L	M 12×1.5	06	8.1	4.0	7.1	10
08-L	M 14×1.5	08	10.1	6.0	7.1	10
10-L	M 16×1.5	10	12.3	8.0	7.1	11
12-L	M 18×1.5	12	14.3	10.0	7.1	11
15-L	M 22×1.5	15	17.3	12.0	7.1	12
18-L	M 26×1.5	18	20.3	15.0	7.6	12
22-L	M 30×2	22	24.3	19.0	7.6	14
28-L	M 36×2	28	30.3	24.0	7.6	14
35-L	M 45×2	35	38.0	30.0	10.6	16
42-L	M 52×2	42	45.0	36.0	11.1	16
06-S	M 14×1,5	06	8.1	4.0	7.1	12
08-S	M 16×1.5	08	10.1	5.0	7.1	12
10-S	M 18×1.5	10	12.3	7.0	7.6	12
12-S	M 20×1.5	12	14.3	8.0	7.6	12
14-S	M 22×1.5	14	16.3	10.0	8.1	14
16-S	M 24×1.5	16	18.3	12.0	8.6	14
20-S	M 30×2	20	22.9	16.0	10.6	16
25-S	M 36×2	25	27.9	20.0	12.1	18
30-S	M 42×2	30	33.0	25.0	13.6	20
38-S	M 52×2	38	41.0	32.0	16.1	22

D

EO 24°-DKO swivel connector (DIN 3865/DIN EN ISO 8434-4)/dimensions

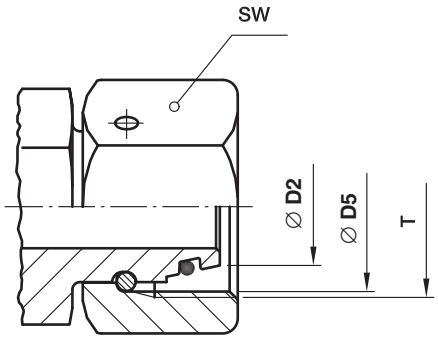

Tube O.D. Size	T	∅ D2 mm	∅ D5 mm Thread core diameter	SW mm
06-L	M 12×1.5	5.5	10.38	14
08-L	M 14×1.5	7.5	12.38	17
10-L	M 16×1.5	9.7	14.38	19
12-L	M 18×1.5	11.7	16.38	22
15-L	M 22×1.5	14.7	20.38	27
18-L	M 26×1.5	17.7	24.38	32
22-L	M 30×2	21.7	27.84	36
28-L	M 36×2	27.7	33.84	41
35-L	M 45×2	34.5	42.84	50
42-L	M 52×2	41.5	49.84	60
06-S	M 14×1.5	5.5	12.38	17
08-S	M 16×1.5	7.5	14.38	19
10-S	M 18×1.5	9.7	16.38	22
12-S	M 20×1.5	11.7	18.38	24
14-S	M 22×1.5	13.5	20.38	27
16-S	M 24×1.5	15.5	22.38	30
20-S	M 30×2	19.5	29.84	36
25-S	M 36×2	24.5	33.84	46
30-S	M 42×2	29.5	39.84	50
38-S	M 52×2	37.5	49.84	60

Overview O-Lok® connections

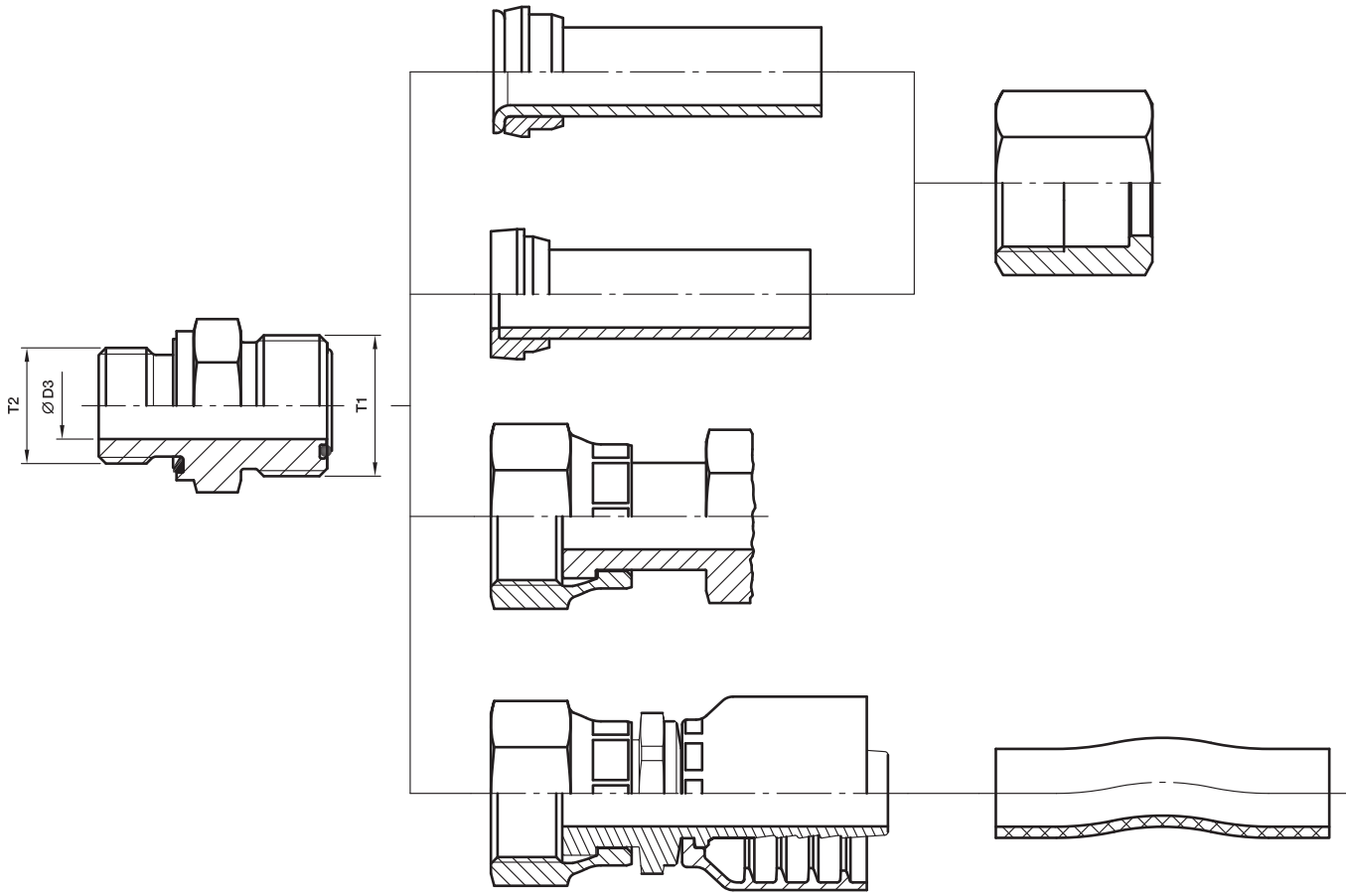

D

Overview O-Lok® connections

Size	Tube: Metric tube O.D. mm	Tube: Metric tube max. Wall thickness mm	Tube: Inch tube O.D. inch	Tube: Inch tube max. Wall thickness inch	T1 Thread UN/UNF	∅ D3 Bore diameter mm	T2 Port thread: BSPP	T2 Port thread: UN/UNF	T2 Port thread: NPTF	T2 Port thread: metric	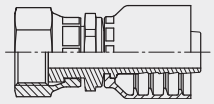
4	6	1.5	1/4	0.065		4.0	G 1/8 A	7/16-20	1/8	M 12×1.5	
4-4	6	1.5	1/4	0.065	9/16-18	4.5	G 1/4 A		1/4		1JCxx-4-yy
4-6	6	1.5	1/4	0.065		4.5	G 3/8 A	9/16-18	3/8		
4-8	6	1.5	1/4	0.065		4.5	G 1/2 A	3/4-16			
6	8	2.0	5/16	0.095	1 1/16-16	6.5	G 1/4 A	9/16-18	1/4	M 16×1.5	
6	10	2.0	5/16	0.095		6.5	G 1/4 A	9/16-18	1/4	M 16×1.5	
6-2	10	2.0	5/16	0.095		4.5	G 1/8 A				
6-4	10	2.0	5/16	0.095		4.5		7/16-20			1JCxx-6-yy
6-6	10	2.0	5/16	0.095	1 1/16-16	6.5	G 3/8 A		3/8		
6-8	10	2.0	5/16	0.095		6.5	G 1/2 A	3/4-16	1/2		
6-10	10	2.0	5/16	0.095		6.5		7/8-14			
6-12	10	2.0	5/16	0.095		6.5	G 3/4 A				
8	12	3.0	1/2	0.095		9.5	G 3/8 A	3/4-16	3/8	M 18×1.5	1JCxx-8-yy
8-4	12	3.0	1/2	0.095		7.5	G 1/4 A				
8-6	12	3.0	1/2	0.095		9.5		9/16-18			
8-8	12	3.0	1/2	0.095	1 3/16-16	9.5	G 1/2 A	1/2			
8-10	12	3.0	1/2	0.095		9.5		7/8-14			
8-12	12	3.0	1/2	0.095		9.5	G 3/4 A	1 1/16-12	3/4		
8-16	12	3.0	1/2	0.095		9.5		1 5/16-12			
10	14	2.5			1-14	12.5	G 1/2 A	7/8-14	1/2	M 22×1.5	
10	15	2.5			1-14	12.5	G 1/2 A	7/8-14	1/2	M 22×1.5	
10	16	3.0	5/8	0.120		12.5	G 1/2 A	7/8-14	1/2	M 22×1.5	
10-6	16	3.0	5/8	0.120		10.0	G 3/8 A				1JCxx-10-yy
10-8	16	3.0	5/8	0.120	1-14	9.5		3/4-16			
10-12	16	3.0	5/8	0.120		12.5	G 3/4 A	1 1/16-12	3/4		
10-16	16	3.0	5/8	0.120		12.5	G 1 A				
12	18	3.0			1 3/16-12	15.5	G 3/4 A	1 1/16-12	3/4	M 27×2	
12	20	3.5	3/4	0.156		15.5	G 3/4 A	1 1/16-12	3/4	M 27×2	
12-8	20	3.5	3/4	0.156		9.5	G 1/2 A	3/4-16	1/2		1JCxx-20-yy
12-10	20	3.5	3/4	0.156	1 3/16-12	12.5		7/8-14			
12-16	20	3.5	3/4	0.156		12.5	G 1 A	1 5/16-12	1		
12-20	20	3.5	3/4	0.156		12.5	G 1 1/4 A				
16	22	4.0			1 7/16-12	20.5	G 1 A	1 5/16-12	1	M 33×2	
16	25	4.0	1	0.188		20.5	G 1 A	1 5/16-12	1	M 33×2	
16-12	25	4.0	1	0.188	1 7/16-12	15.5	G 3/4 A	1 1/16-12	3/4		1JCxx-16-yy
16-20	25	4.0	1	0.188		20.5	G 1 1/4 A	1 5/8-12			
16-24	25	4.0	1	0.188		20.5	G 1 1/2 A				
20	28	4.0			1 11/16-12	26.0	G 1 1/4 A	1 5/8-12	1 1/4	M 42×2	
20	30	4.0			1 11/16-12	26.0	G 1 1/4 A	1 5/8-12	1 1/4	M 42×2	
20	32	4.0	1 1/4	0.188		26.0	G 1 1/4 A	1 5/8-12	1 1/4	M 42×2	1JCxx-20-yy
20-16	32	4.0	1 1/4	0.188	1 11/16-12	21.5	G 1 A	1 5/16-12			
20-24	32	4.0	1 1/4	0.188		26.0	G 1 1/2 A	1 7/8-12			
24	35	4.0			2-12	32.0	G 1 1/2 A	1 7/8-12	1 1/2	M 48×2	
24	38	5.0	1 1/2	0.220	2-12	32.0	G 1 1/2 A	1 7/8-12	1 1/2	M 48×2	1JCxx-24-yy
24-20	38	5.0	1 1/2	0.220		27.5	G 1 1/4 A	1 5/8-12			
32	50	3.0	2	0.120	2 1/2-12	45.0	G 2A	2 1/2-12		M 60×2	—

xx – Fitting Series • yy – Hose Size

From Parker hose fitting (HPDE and PFDE)

O-Lok® end (ISO 8434-3/SAE J1453)/dimensions

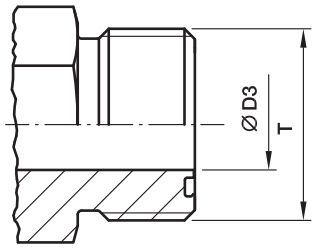

Size	Tube O.D. inch	Tube O.D. mm	T UN/UNF	T Major thread ∅ mm	∅ D3 mm
4	1/4	6	9/16-18	14.0	5.0
6	5/16. 3/8	8, 10	1 1/16-16	17.0	6.5
8	1/2	12	1 3/16-16	20.5	9.5
10	5/8	14, 15, 16	1-14	25.0	12.5
12	3/4	18, 20	1 3/16-12	30.0	15.5
16	7/8. 1	22, 25	1 7/16-12	36.0	20.5
20	1 1/4	28, 30. 32	1 11/16-12	42.5	26.0
24	1 1/2	35, 38	2-12	50.5	32.0
32	2	50	2 1/2-12	63.0	45.0

All dimensions shown are nominal for identification only.
Small deviations may be found between SAE J1453 or ISO 8484-3 on bore sizes.

D

O-Lok® swivel connector (ISO 8434-3/SAE J1453)/dimensions

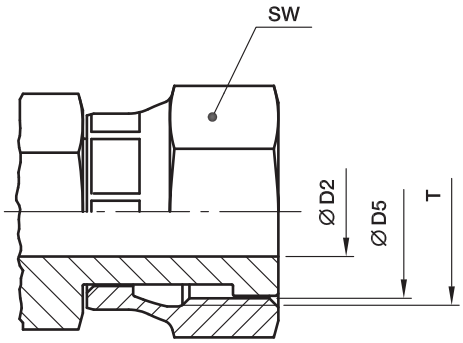

Size	Tube O.D. inch	Tube O.D. mm	T UN/UNF	∅ D5 Thread core diameter mm	SW mm	∅ D2 mm
4	1/4	6	9/16-18	12.5	17	4.0
6	5/16, 3/8	8, 10	1 1/16-16	16.0	22	6.5
8	1/2	12	1 3/16-16	19.0	24	9.0
10	5/8	14, 15, 16	1-14	23.0	30	11.5
12	3/4	18, 20	1 3/16-12	28.0	36	14.0
16	7/8, 1	22, 25	1 7/16-12	34.0	41	20.0
20	1 1/4	28, 30, 32	1 11/16-12	40.5	50	26.0
24	1 1/2	35, 38	2-12	48.0	60	32.0

All dimensions shown are nominal for identification only.
Small deviations may be found between SAE J1453 or ISO 8484-3 on bore sizes.

Overview Triple-Lok® connections

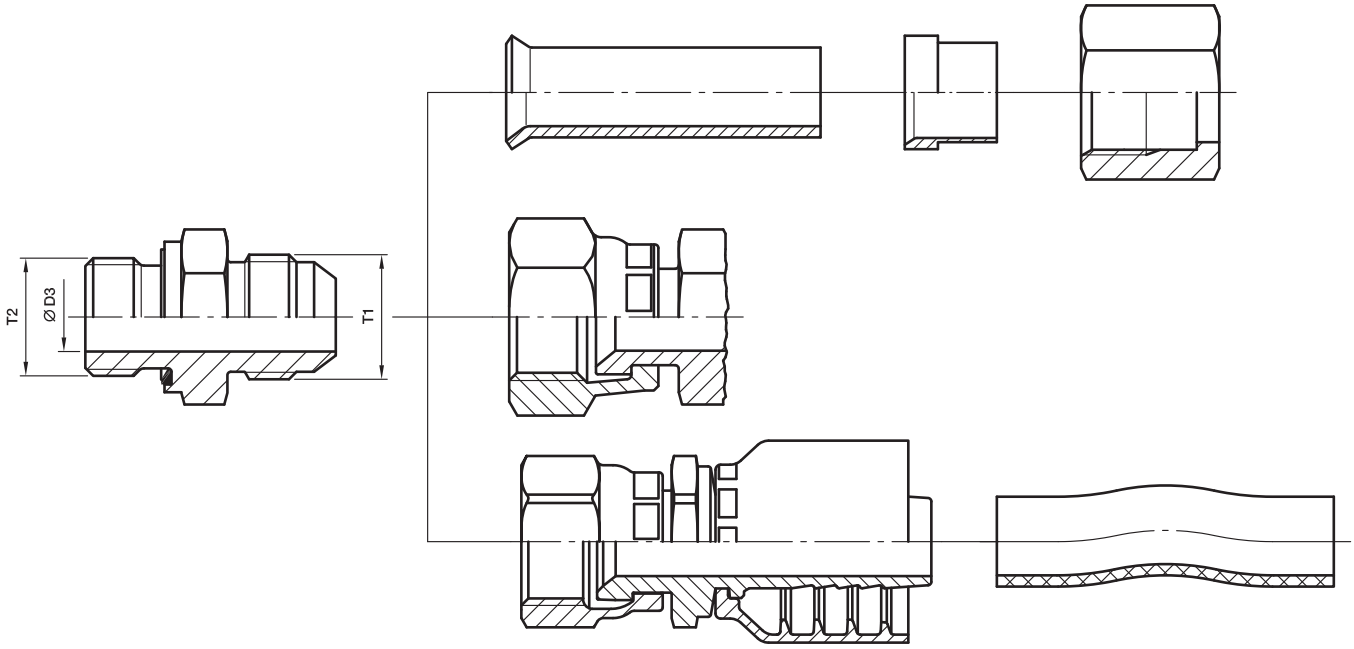

D

Overview Triple-Lok® connections

Size	Tube: Metric tube O.D. thickness mm	Tube: Metric tube max. Wall mm	Tube: Inch tube O.D. thickness inch	Tube: Inch tube max. Wall UN/UNF inch	T1 Thread diameter	∅ D3 Bore BSPP mm	T2 Port thread UN/UNF (BSPT, NPTF)	T2 Port thread metric	T2 Port thread	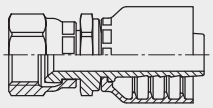
4	6	1.5	1/4	0.065		4.5	G 1/8 A	7/16-20	M 10×1.0	
4-4	6	1.5	1/4	0.065		4.5	G 1/4 A			
4-5	6	1.5	1/4	0.065	7/16-20	4.5		1/2-20		168xx-4-yy
4-6	6	1.5	1/4	0.065		4.5	G 3/8 A	9/16-18		
4-8	6	1.5	1/4	0.065		4.5	G 1/2 A			
5	8	1.5	5/16	0.065		6.0	G 1/8 A	1/2-20	M 12×1.5	
5-4	8	1.5	5/16	0.065	1/2-20	6.0	G 1/4 A			168xx-5-yy
5-6	8	1.5	5/16	0.065		6.0	G 3/8 A			
5-8	8	1.5	5/16	0.065		6.0	G 1/2 A			
6-2	10	1.5	3/8	0.065		7.5	G 1/8 A			
6	10	1.5	3/8	0.065	9/16-18	7.5	G 1/4 A	9/16-18	M 14×1.5	106xx-6-yy
6-6	10	1.5	3/8	0.065		7.5	G 3/8 A			
6-8	10	1.5	3/8	0.065		7.5	G 1/2 A	3/4-16		
8-4	12	2.0	1/2	0.083		10.0	G 1/4 A			
8	12	2.0	1/2	0.083		10.0	G 3/8 A	3/4-16	M 16×1.5	
8-8	12	2.0	1/2	0.083	3/4-16	10.0	G 1/2 A		M 18×1.5	168xx-8-yy
8-10	12	2.0	1/2	0.083		10.0		7/8-14		
8-12	12	2.0	1/2	0.083		10.0	G 3/4 A	1 1/16-12		
10-6	14, 15, 16	2.5	5/8	0.095		12.5	G 3/8 A			
10-8	14, 15, 16	2.5	5/8	0.095	7/8-14	12.5		3/4-16		168xx-10-yy
10	14, 15, 16	2.5	5/8	0.095		12.5	G 1/2 A	7/8-14	M 18×1.5	
10-12	14, 15, 16	2.5	5/8	0.095		12.5	G 3/4 A	1 1/16-12	M 22×1.5	
12-8	18, 20	3.0	3/4	0.109		15.5	G 1/2 A	3/4-16		
12-10	18, 20	3.0	3/4	0.109	1 1/16-12	15.5		7/8-14	M 22×1.5	106xx-12-yy
12	18, 20	3.0	3/4	0.109		15.5	G 3/4 A	1 1/16-12	M 27×2.0	
12-16	18, 20	3.0	3/4	0.109		15.5	G 1 A	1 5/16-12		
14	22	3.0	7/8	0.109	1 3/16-12	18.0	G 3/4 A	1 3/16-12	M 27×2.0	—
14-16	22	3.0	7/8	0.109		18.0	G 1 A	1 5/16-12		
16-12	25	3.0	1	0.120		21.5	G 3/4 A	1 1/16-12		
16	25	3.0	1	0.120	1 5/16-12	21.5	G 1 A	1 5/16-12	M 33×2.0	106xx-16-yy
16-20	25	3.0	1	0.120		21.5	G 1 1/4 A	1 5/8-12		
20-12	28, 30, 32	3.0	1 1/4	0.120		27.5	G 3/4 A			
20-16	28, 30, 32	3.0	1 1/4	0.120	1 5/8-12	27.5	G 1 A			106xx-20-yy
20	28, 30, 32	3.0	1 1/4	0.120		27.5	G 1 1/4 A	1 5/8-12	M 42×2.0	
24-20	35, 38	4.0	1 1/2	0.120	1 7/8-12	33.0	G 1 1/4 A			106xx-24-yy
24	35, 38	4.0	1 1/2	0.120		33.0	G 1 1/2 A	1 7/8-12	M 48×2.0	
28-24	42	3.0			2 1/4-12	39.0	G 1 1/2 A			—
32	50	3.5	2	0.134	2 1/2-12	45.0	G 2 A	2 1/2-12		106xx-32-yy

xx – Fitting Series • yy – Hose Size

From Parker hose fitting (HPDE and PFDE)

Triple-Lok® end (ISO 8434-2/SAE J514)/dimensions

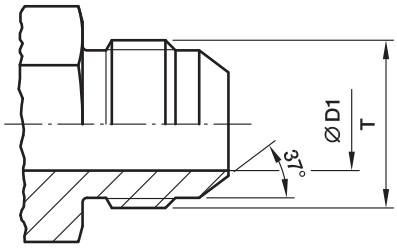

Size	Tube O.D. inch	Tube O.D. mm	T UN/UNF	T Major thread ∅ mm	∅ D1 mm
4	1/4	6	7/16-20	11.0	4.5
5	5/16	8	1/2-20	12.5	6.0
6	3/8	10	9/16-18	14.0	7.5
8	1/2	12	3/4-16	19.0	10.0
10	5/8	14, 15, 16	7/8-14	22.0	12.5
12	3/4	18, 20	1 1/16-12	27.0	15.5
14	7/8	22	1 3/16-12	30.0	18.0
16	1	25	1 5/16-12	33.0	21.5
20	1 1/4	28, 30, 32	1 5/8-12	41.0	27.5
24	1 1/2	35, 38	1 7/8-12	47.5	33.0
28*	1 3/4	42	2 1/4-12	57.0	39.0
32	2	—	2 1/2-12	63.5	45.0

*Size 28 is not part of SAE J514 or ISO 8434-2.

All dimensions shown are nominal for identification only.
Small deviations may be found between SAE J514 or ISO 8484-2 on bore sizes.

Suitable Flare

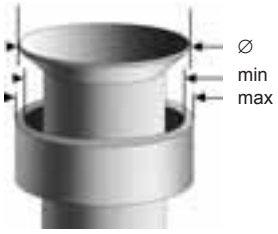

Tube O.D. mm	Tube O.D. inch	∅ D Min.	∅ D Max.
6	1/4″	8.6	9.7
8	5/16″	10.2	11.3
10	3/8″	11.7	12.7
12	1/2″	16.0	17.3
14		19.3	20.2
15		19.3	20.2
16	5/8″	19.3	20.2
18		23.4	24.7
20	3/4″	23.4	24.7
22	7/8″	26.5	27.8
25	1″	29.7	31.0
28		37.6	38.9
30		37.6	38.9
32	1.1/4″	37.6	38.9
35		43.2	45.3
38	1.1/2″	43.2	45.3
42		52.0	54.8
	2″	59.2	61.2

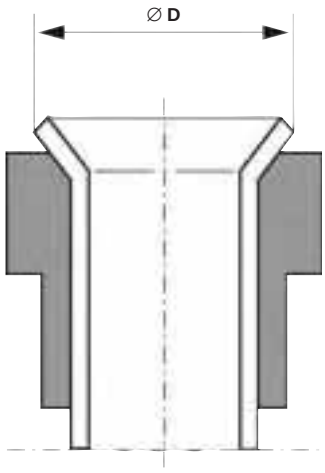

37°-Flare acc. ISO 8434-2 not compatible with Flare according DIN 3949.

D

Triple-Lok® swivel connector (ISO 8434-2/SAE J514)/dimensions

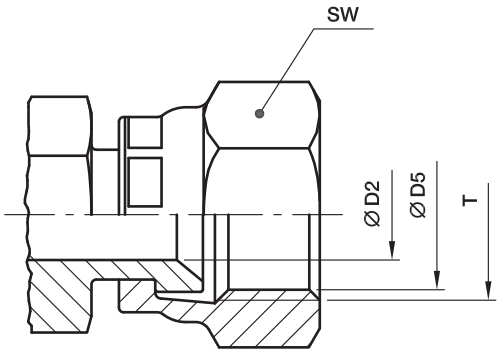

Size	Tube O.D. Inch	Tube O.D. mm	T UN/UNF	SW mm	∅ D5 Thread core diameter mm	∅ D2 mm
4	1/4	6	7/16-20	17	10.0	4.4
5	5/16	8	1/2-20	17	11.5	6.0
6	3/8	10	9/16-18	19	13.0	7.5
8	1/2	12	3/4-16	22	17.5	9.9
10	5/8	14, 15, 16	7/8-14	27	20.5	12.3
12	3/4	18, 20	1 1/16-12	32	25.0	15.5
14	7/8	22	1 3/16-12	35	28.0	18.0
16	1	25	1 5/16-12	38	31.0	21.5
20	1 1/4	28, 30, 32	1 5/8-12	50	39.0	27.5
24	1 1/2	35. 38	1 7/8-12	60	45.5	33.0
32	2	—	2 1/2-12	75	61.5	45.0

All dimensions shown are nominal for identification only.
Small deviations may be found between SAE J514 or ISO 8484-2 on bore sizes.

DIN 60° cone end (DIN 7631)/dimensions

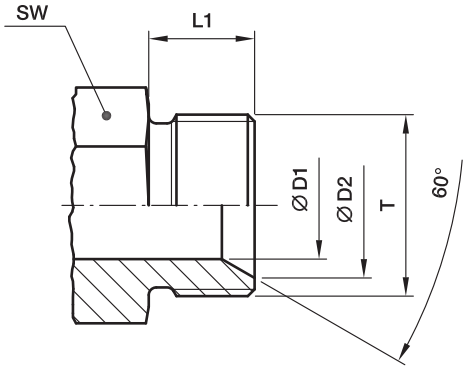

Tube O.D. mm	T	∅ D1 mm	∅ D2 mm	L1 mm	SW mm
4–5	M 10×1.5	3	8.0	8	11
06	M 12×1.5	4	9.0	10	12
08	M 14×1.5	6	11.0	10	14
10	M 16×1.5	8	13.0	11	17
12	M 18×1.5	10	15.0	11	19
15	M 22×1.5	12	19.0	12	24
18	M 26×1.5	15	22.0	12	27
22	M 30×1.5	19	26.0	14	32
28	M 38×1.5	25	33.0	14	41
35	M 45×1.5	32	40.0	16	46
42	M 52×1.5	39	47.0	16	55

D

Adapter 60° cone end (ISO/DIS 8434-6)/dimensions

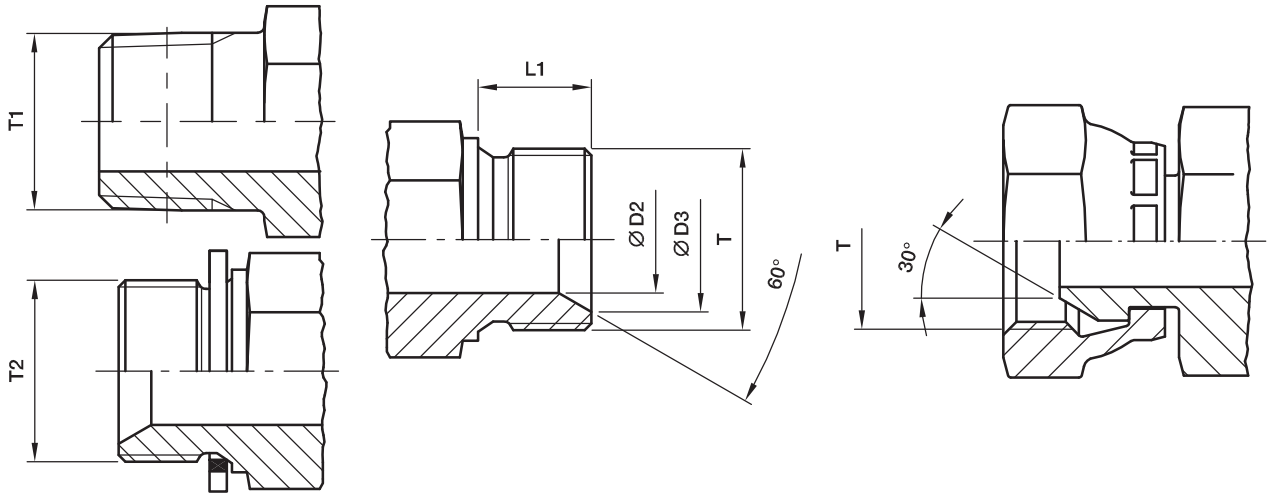

Size	T BSPP	D2 mm	D3 mm	L1 mm	T1 BSPT	T1 NPT(F)	T2 BSPP
02	G 1/8 A	3.5	7.5	8	1/8 1/4	1/8 1/4	1/8
04	G 1/4 A	4.7	10.4	11	1/4 1/8 3/8	1/4 1/8 3/8	1/4 1/8
06	G 3/8 A	7.9	14.0	12	3/8 1/4 1/2	3/8 1/4 1/2	3/8 1/4
08	G 1/2 A	11.1	17.5	14	1/2 3/8	1/2 3/8 3/4	1/2 1/4 3/8
10	G 5/8 A	14.3	19.3	16	1/2 3/4		1/2 5/8
12	G 3/4 A	16.7	22.9	16	3/4 1/2 1	3/4 1/2 1	3/4 1/4 3/8 1/2 5/8
16	G 1 A	22.2	28.7	19	1 3/4	1 3/4	1 1/2 5/8 3/4
20	G 1 1/4 A	28.6	36.8	22	1 1/4		3/4 1 1 1/4
24	G 1 1/2 A	33.3	42.7	22	1 1/2		1 1 1/4 1 1/2
32	G 2 A	46.0	54.6	25			1 1/2 2

NPSM Swivel adapters (SAE J516)/dimensions

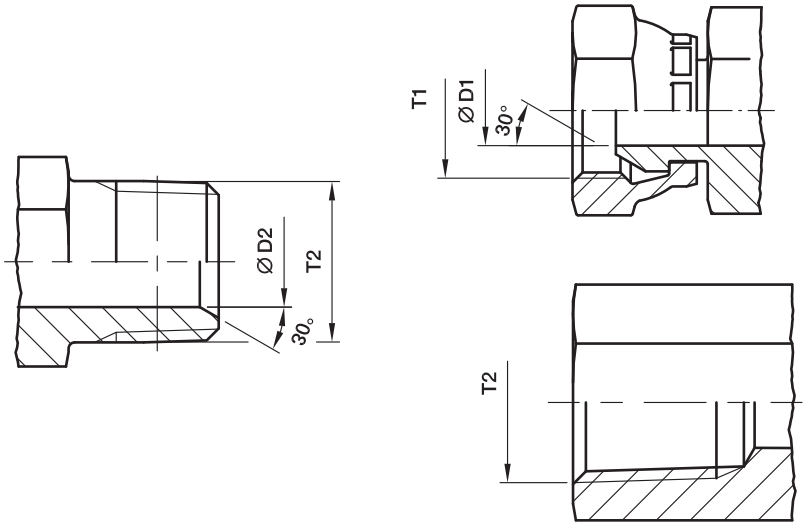

Size	T1 Thread NPSM	∅ D1 mm	∅ D2 mm	T2 Thread NPTF
2-2	1/8-27	4.0	5.0	1/8-27
2-4	1/4-18	5.6	7.0	1/8-27
4-4	1/4-18	5.6	7.0	1/4-18
4-6	3/8-18	8.8	10.0	1/4-18
4-8	1/2-14	12.0	13.5	1/4-18
6-4	1/4-18	5.6	7.0	3/8-18
6-6	3/8-18	8.8	10.0	3/8-18
6-8	1/2-14	12.0	13.5	3/8-18
8-4	1/4-18	5.6	7.0	3/4-16
8-6	3/8-18	8.8	10.0	1/2-14
8-8	1/2-14	12.0	13.5	1/2-14
8-12	3/4-14	16.3	18.0	1/2-14
10-6	3/8-18	8.8	10.0	7/8-14
10-8	1/2-14	12.0	13.5	7/8-14
10-12	3/4-14	16.3	18.0	7/8-14
12-6	3/8-18	8.8	10.0	3/4-14
12-8	1/2-14	12.0	13.5	3/4-14
12-12	3/4-14	16.3	18.0	3/4-14
12-16	1-11 1/2	21.4	28.9	
16-12	3/4-14	16.3	13.5	1-11 1/2
16-16	1-11 1/2	21.4	28.9	1-11 1/2
16-20	1 1/4-11 1/2	29.0	32.0	1-11 1/2
20-16	1-11 1/2	21.4	28.9	1 1/4-11 1/2
20-20	1 1/4-11 1/2	29.0	32.0	1 1/4-11 1/2
24-24	1 1/2-11 1/2	34.5	38.0	1 1/2-11 1/2
32-32	2-11 1/2	46.0	49.0	2-11 1/2

D

Male stud ends/Port end dimensions for tube fittings

Preferred male stud ends for hydraulic applications

For new designs the metric version is recommended according to DIN ISO 6149

Male stud non adjustable without retaining-ring
Sealing: O-ring
metric – DIN ISO 6149-2/3
UNF – ISO 11926-2/3

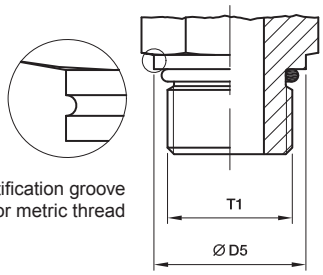

Male stud adjustable without retaining-ring
Sealing: O-ring
metric – DIN ISO 6149-2/3
UNF – ISO 11926-2/3

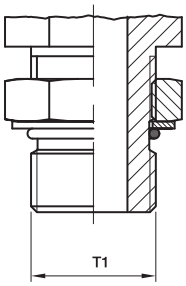

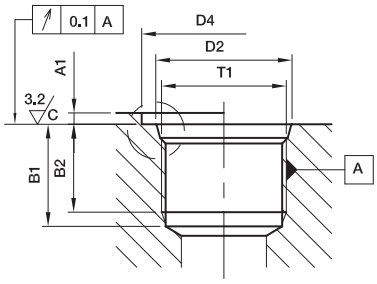

Port
metric – DIN ISO 6149-1
UNF – ISO 11926-1

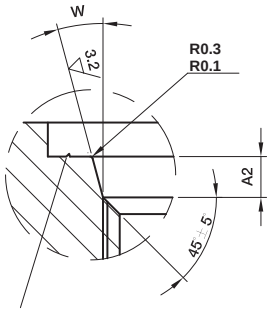

Optional identification of metric port marked with "M"

Thread T1	D5	D4 small min.	D4 wide min.	D2 0.1	A1 max.	A2 0.4	B1 min.	B2 min.	W ± 1°	Identification internal Thread major diameter	Identification internal Thread minor diameter
M 8×1	11.8	14	17	9.10	1.0	1.6	11.5	10.0	12°	8.00	6.92
M 10×1	13.8	16	20	11.10	1.0	1.6	11.5	10.0	12°	10.00	8.92
M 12×1.5	16.8	19	23	13.80	1.5	2.4	14.0	11.5	15°	12.00	10.38
M 14×1.5	18.8	21	25	15.80	1.5	2.4	14.0	11.5	15°	14.00	12.38
M 16×1.5	21.8	24	28	17.80	1.5	2.4	15.5	13.0	15°	16.00	14.38
M 18×1.5	23.8	26	30	19.80	2.0	2.4	17.0	14.5	15°	18.00	16.38
M 22×1.5	26.8	29	34	23.80	2.0	2.4	18.0	15.5	15°	22.00	20.38
M 27×2	31.8	34	40	29.40	2.0	3.1	22.0	19.0	15°	27.00	24.84
M 33×2	40.8	43	49	35.40	2.5	3.1	22.0	19.0	15°	33.00	30.84
M 42×2	49.8	52	60	44.40	2.5	3.1	22.5	19.5	15°	42.00	39.84
M 48×2	54.8	57	66	50.40	2.5	3.1	25.0	22.0	15°	48.00	45.84
7/16-20 UNF-2B	13.8	21	—	12.40	1.6	2.4	14.0	11.5	12°	11.11	9.74
1/2-20 UNF-2B	16.8	23	—	14.50	1.6	2.5	14.0	11.5	12°	12.70	11.30
9/16-18 UNF-2B	16.8	25	—	15.65	1.6	2.5	15.5	12.7	12°	14.29	12.76
3/4-16 UNF-2B	21.8	30	—	20.60	2.4	2.5	17.5	14.3	15°	19.05	17.33
7/8-14 UNF-2B	26.8	34	—	23.95	2.4	2.5	20.0	16.7	15°	22.23	20.26
1 1/16-12 UN-2B	31.8	41	—	29.15	2.4	3.3	23.0	19.0	15°	26.99	24.69
1 5/16-12 UN-2B	40.8	49	—	35.50	3.2	3.3	23.0	19.0	15°	33.34	31.04
1 5/8-12 UN-2B	49.8	58	—	43.50	3.2	3.3	23.0	19.0	15°	41.28	38.99
1 7/8-12 UN-2B	54.8	65	—	49.85	3.2	3.3	23.0	19.0	15°	47.63	45.33

Port end dimensions for tube fittings

Male stud Type E
Sealing: Eolastic seal ED
metric: DIN EN ISO 9974-2
BSPP: ISO 1179-2

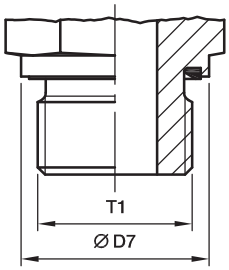

Male stud Type G
(non-adjustable with retaining-ring)
Sealing: O-ring
metric: —
BSPP: ISO 1179-3

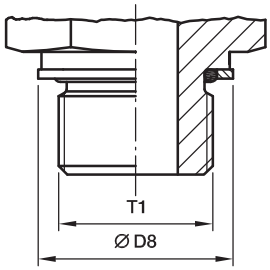

Male stud Type H
(adjustable with retaining-ring)
Sealing: O-ring
metric: —
BSPP: ISO 1179-3

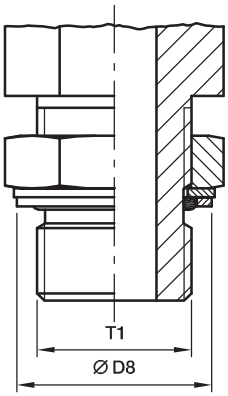

Male stud Type B
Sealing: Cutting face
metric: DIN EN ISO 9974-3
BSPP: ISO 1179-4

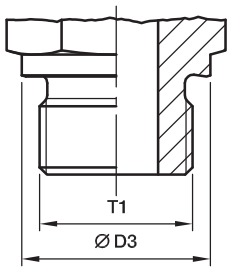

Male stud Type A
Sealing: Sealing washer DIN 7603, e.g. copper
metric: DIN 3852-1
BSPP: DIN 3852-2

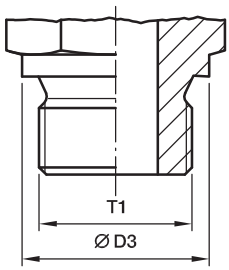

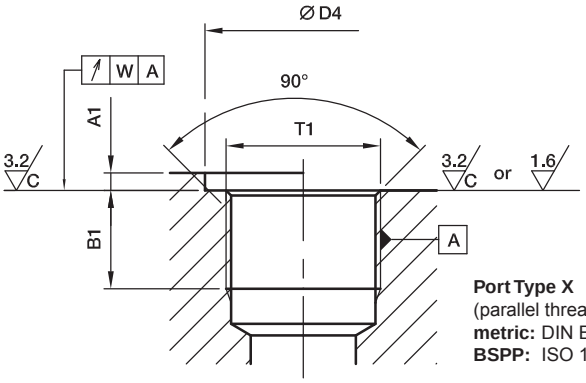

Port Type X
(parallel thread)
metric: DIN EN ISO 9974-1
BSPP: ISO 1179-1

Thread T1	Ø D3 mm	Ø D7 mm	D8 small	D8 wide	D4 min. small	$D4^{+0.4}$ wide*	A1 max.	B1 min.	W	Identification internal Thread major diameter	Identification internal Thread minor diameter
M 8×1			12.8	13.15					0.1	8.00	6.92
M 10×1	13.9	13.9	14.8	14.75	15	20	1.0	8	0.1	10.00	8.92
M 12×1.5	16.9	16.9	17.8	17.75	18	25	1.5	12	0.1	12.00	10.38
M 14×1.5	18.9	18.9	19.8	19.75	20	25	1.5	12	0.1	14.00	12.38
M 16×1.5	20.9	21.9	22.8	21.75	23	28	1.5	12	0.1	16.00	14.38
M 18×1.5	22.9	23.9	24.8	23.75	25	30	2.0	12	0.1	18.00	16.38
M 20×1.5	24.9	25.9	26.8	25.75	27	34	2.0	14	0.1	20.00	18.38
M 22×1.5	26.9	26.9	27.8	27.75	28	34	2.5	14	0.1	22.00	20.38
M 26×1.5	30.9	31.9	32.8	31.75	33	42	2.5	16	0.2	26.00	24.38
M 27×2	31.9	31.9	32.8	32.75	33	42	2.5	16	0.2	27.00	24.84
M 33×2	38.9	39.9	40.8	39.75	41	47	2.5	18	0.2	33.00	30.84
M 42×2	48.9	49.9	50.8	49.75	51	58	2.5	20	0.2	42.00	39.84
M 48×2	54.9	54.9	55.8	54.95	56	65	2.5	22	0.2	48.00	45.84
G 1/8 A	13.8	13.9	14.8	15.00	15	19	1.0	8	0.1	9.73	8.57
G 1/4 A	17.8	18.9	19.8	19.5	20	25	1.5	12	0.1	13.16	11.45
G 3/8 A	21.8	21.9	22.8	23.5	23	28	2.0	12	0.1	16.66	14.95
G 1/2 A	25.8	26.9	27.8	28.5	28	34	2.5	14	0.1	20.96	18.63
G 3/4 A	31.8	31.9	32.8	34.5	33	42	2.5	16	0.2	26.44	24.12
G 1 A	38.8	39.9	40.8	43.5	41	47	2.5	18	0.2	33.25	30.29
G 1 1/4 A	48.8	49.9	50.8	52.5	51	58	2.5	20	0.2	41.91	38.95
G 1 1/2 A	54.8	54.9	55.8	60.00	56	65	2.5	22	0.2	47.80	44.85

*For inch threads: Enlarged diameter vs. ISO 1179-1 to adopt multiple seal ring designs.

D

Port end dimensions for tube fittings

Male stud NPT/F
Sealing: Tapered thread[1])
NPT ANSI/ASME B 1.20.1-1983
NPTF ANSI/ASME B 1.20.3-1976

Male stud BSPT
Sealing: Tapered thread[1])
ISO 7/BS 21/DIN 2999-1

Male stud Type C
Sealing: Tapered thread short[1])
metric DIN 3852-1
Inch DIN 3852-2

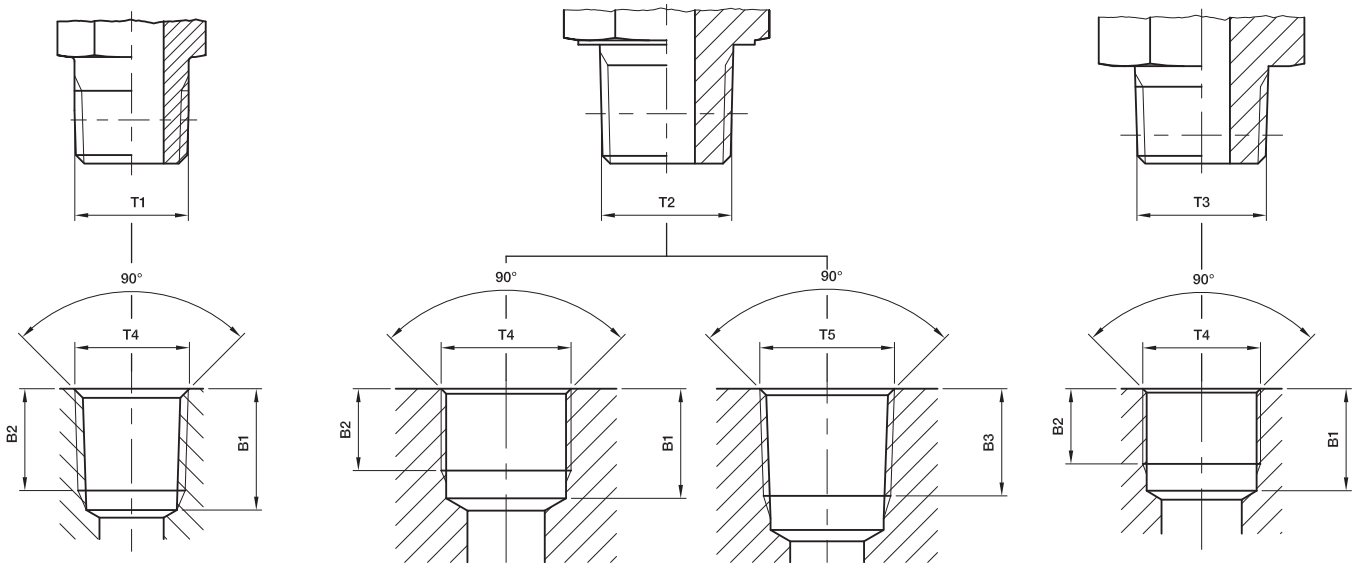

Port NPT/F (taper)
NPT ANSI/ASME B 1.20.1-1983
NPTF ANSI/ASME B 1.20.3-1976

Port BSPP (parallel)
ISO 7/1-Rp
BS 21-Rp (ISO 1179-1)

Port BSPT (taper)
ISO 7/1-Rc/BS 21-Rc
DIN 2999-Rc (Japan: PT)

Port (parallel)
metric DIN 3852-1
Inch DIN 3852-2

Thread T1	Thread T2	Thread T3	Thread T4	Thread T5	B1 min.	B2 min.	B3 min.
1/8-27 NPT/F*			1/8-27 NPT/F*		11.6	6.9	
1/4-18 NPT/F*			1/4-18 NPT/F*		16.4	10.0	
3/8-18 NPT/F*			3/8-18 NPT/F*		17.4	10.3	
1/2-14 NPT/F*			1/2-14 NPT/F*		22.6	13.6	
3/4-14 NPT/F*			3/4-14 NPT/F*		23.1	14.1	
1-11.5 NPT/F*			1-11.5 NPT/F*		27.8	16.8	
11/4-11.5 NPT/F*			11/4-11.5 NPT/F*		28.3	17.3	
11/2-11.5 NPT/F*			11/2-11.5 NPT/F*		28.3	17.3	
	R 1/8		Rp 1/8	Rc 1/8	9.7	7.9	7.4
	R 1/4		Rp 1/4	Rc 1/4	12.0	11.2	11.0
	R 3/8		Rp 3/8	Rc 3/8	13.5	12.0	11.4
	R 1/2		Rp 1/2	Rc 1/2	17.6	15.0	15.0
	R 3/4		Rp 3/4	Rc 3/4	19.1	16.0	16.3
	R 1		Rp 1	Rc 1	21.4	19.1	19.0
	R 1 1/4		Rp 1 1/4	Rc 1 1/4	21.4	19.9	21.4
	R 1 1/2		Rp 1 1/2	Rc 1 1/2	22.4	20.6	21.4
		M 8×1 tap.	M 8×1		10.0	5.5	
		M 10×1 tap.	M 10×1		10.0	5.5	
		M 12×1.5 tap.	M 12×1.5		13.5	8.5	
		M 14×1.5 tap.	M 14×1.5		13.5	8.5	
		M 16×1.5 tap.	M 16×1.5		13.5	8.5	
		M 18×1.5 tap.	M 18×1.5		13.5	8.5	
		M 20×1.5 tap.	M 20×1.5		15.5	10.5	
		M 22×1.5 tap.	M 22×1.5		15.5	10.5	
		R 1/8 tap.	Rp 1/8		8.5	5.5	
		R 1/4 tap.	Rp 1/4		12.5	8.5	
		R 3/8 tap.	Rp 3/8		12.5	8.5	
		R 1/2 tap.	Rp 1/2		16.5	10.5	

*In the **EO** fitting range only **NPT** thread is manufactured.
In the **Triple-Lok®, O-Lok® and adapters** fitting range for **steel NPTF** thread is manufactured and for **stainless steel NPT** thread is manufactured.
1)Tightness can only be achieved by liquid or plastic sealing aids.