Thread dimensions and bore dimensions – Technical data for assembly

Metric thread EN 60423 (for cable glands EN 50 262)

Metric thread	ø D1	P	ø D2	Nominal Thread ø D3
M12 x 1.5	12	1.5	10.6	12.3 – 0.2
M16 x 1.5	16	1.5	14.6	16.3 – 0.2
M20 x 1.5	20	1.5	18.6	20.3 – 0.2
M25 x 1.5	25	1.5	23.6	25.3 – 0.2
M32 x 1.5	32	1.5	30.6	32.3 – 0.2
M40 x 1.5	40	1.5	38.6	40.4 – 0.3
M50 x 1.5	50	1.5	48.6	50.4 – 0.3
M63 x 1.5	63	1.5	61.6	63.4 – 0.3
M75 x 1,5	75	1,5	73,6	75,4 – 0,3
M90 x 2	90	2	88,8	90,4 – 0,3
M110 x 2	110	2	108,8	110,4 – 0,3

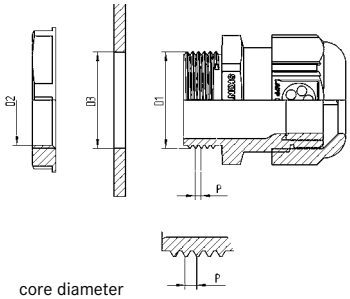

D1 = core diameter
D2 = outside diameter
D3 = bore diameter
P = pitch

Metric thread DIN 13 part 6 and 7 (for cable glands according to DIN 89 280)

Metric thread	ø D1	P	ø D2	Nominal Thread ø D3
M18 x 1.5	18	1.5	16.4	18.3 – 0.2
M24 x 1.5	24	1.5	22.4	24.3 – 0.2
M30 x 2	30	2	27.8	30.3 – 0.2
M36 x 2	36	2	33.8	36.3 – 0.2
M45 x 2	45	2	42.8	45.4 – 0.3
M56 x 2	56	2	53.8	56.4 – 0.3
M72 x 2	72	2	69.8	72.5 – 0.4
M80 x 2	80	2	77.8	80.5 – 0.4
M105 x 2	105	2	102.8	105.5 – 0.4

Technical data for assembly DIN 40430

PG thread	ø D1	P	ø D2	Nominal Thread ø D3
PG 7	12.5	1.27	11.3	13.0 ± 0.2
PG 9	15.2	1.41	13.9	15.7 ± 0.2
PG 11	18.6	1.41	17.3	19.0 ± 0.2
PG 13.5	20.4	1.41	19.1	21.0 ± 0.2
PG 16	22.5	1.41	21.2	23.0 ± 0.2
PG 21	28.3	1.588	26.8	28.8 ± 0.2
PG 29	37.0	1.588	35.5	37.5 ± 0.3
PG 36	47.0	1.588	45.5	47.5 ± 0.3
PG 42	54.0	1.588	52.5	54.5 ± 0.3
PG 48	59.3	1.588	57.8	59.8 ± 0.3

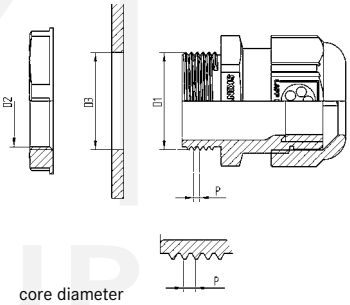

D1 = core diameter
D2 = Outside diameter
D3 = bore diameter
P = pitch

Technical data for assembly ANSI B1.20.2 – 1983

NPT thread	ø D1	P	Nominal Thread ø D3
NPT 1/4"	13.7	1.41	14.1 – 0.2
NPT 3/8"	17.1	1.41	17.4 – 0.2
NPT 1/2"	21.3	1.81	21.6 – 0.2
NPT 3/4"	26.7	1.81	27.0 – 0.2
NPT 1"	33.4	2.21	33.7 – 0.2
NPT 1 1/4"	42.2	2.21	42.5 – 0.2
NPT 1 1/2"	48.3	2.21	48.7 – 0.2
NPT 2"	60.3	2.21	60.7 – 0.2

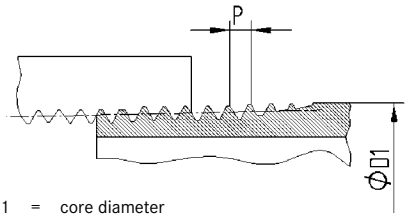

D1 = core diameter
D3 = bore diameter
P = pitch

Tightening torque* for SKINTOP® glands metric

Table of the recommended tightening torque (cap nut, connection thread) for SKINTOP® metric version for attainment of degree of protection and strain relief of category A acc. to EN 50262. Further information regarding degree of protection please see product page.

Thread	Tightening torque in Nm	
	Polymer	Metal
M12 x 1.5	1.5	8
M16 x 1.5	3.0	10
M20 x 1.5	6.0	12
M25 x 1.5	8.0	12
M32 x 1.5	10.0	18
M40 x 1.5	13.0	18
M50 x 1.5	15.0	20
M63 x 1.5	16.0	20
M63 x 1.5 plus	-	25
M75 x 1.5	-	30
M90 x 2	-	45
M110 x 2	-	55

* **Note:** For ATEX cable glands please find the tightening torques in the corresponding operation manuals. (Operation manual attached to the delivery bag)

Tightening torque values* according to DIN/VDE 0619, Point 7 for SKINTOP® glands PG

Thread	Torque for the intermediary in Nm		Torque for the cap nut in Nm
	Polymer	Metal	Polymer
PG 7	2.5	6.25	1.7
PG 9	3.75	6.25	2.5
PG 11	3.75	6.25	2.5
PG 13.5	3.75	6.25	2.5
PG 16	5.0	7.5	3.3
PG 21	7.5	10.0	5.0
PG 21	7.5	10.0	5.0
PG 29	7.5	10.0	5.0
PG 36	7.5	10.0	5.0
PG 42	7.5	10.0	5.0
PG 48	7.5	10.0	5.0

Above values obtain as tightening torques for the connection thread, as well as maximal tightening torques for the cap nuts under in standard regulated temperature. To prevent damages of the outer sheath please note that the different cable materials require various torques.

Fitting dimensions and widths across flats

The diameter A indicates the assembly space required for the relevant hexagon. This diameter corresponds to the width across corner of the hexagon, plus an assembly tolerance.
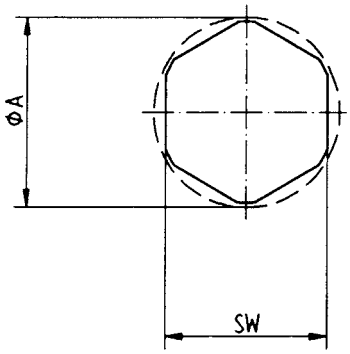
SW	ø A	SW	ø A	SW	ø A
9	10,4	27	30,6	47	52,5
11	12,5	28	31,8	50	58,3
13	14,9	29	32,5	53	60,0
14	16,0	30	34,0	54	61,0
15	17,1	32	36,2	55	62,0
16	18,2	33	37,2	57	64,4
17	19,4	36	40,5	60	67,5
18	20,4	37	41,5	64	72,3
19	22,0	39	44,0	65	73,1
20	22,7	40	45,2	66	74,5
21	23,9	41	46,1	67	74,5
22	25,0	42	47,0	95	105
24	27,3	45	51,2	115	127
25	28,3	45	51,2	135	150
26	29,5	46	52,5